Grounding and Shielding

Veljko Radeka, BNL

- **Outline**
  - **Primary guidelines**
  - **The Liquid Argon Calorimeter system**
    - **Prevention of EMI and isolation**
    - **Safety grounds**
    - **Interface with other subsystems**
  - **Status of implementation and open questions**

Primary Guidelines

- **Derived from the ATLAS Policy on grounding**

  http://atlas.web.cern.ch/Atlas/GROUPS/FRONTEND/ground.htm

  1. **All detector subsystems will be electrically isolated**
  2. **There will be no connection to ground other than "Safety Networks"**
  3. **There will be no connection between different detector subsystems**

  Other detailed guidelines have been derived from this primary ones

  - ✓ *Isolation of power supplies*
  - ✓ *Signal communications by electro-optical or differential transmission lines*
  - ✓ *Detectors in Faraday cages*

- **Compatibles with existing safety policies at CERN:**
  - **Hazard identification by systematic methods (ex. fault tree analysis)**
  - **Establish a procedure/inspection to verify that the detector design does not compromise safety**

The Liquid Argon Calorimeter system

- **Key points in the implementation of electrical isolation within the subsystem and with respect to other subsystems:**

1. **Carefully designed faraday cage**
2. **Clock, trigger, data through optical fibers**
3. **LVL1 sums – Differential transformer Coupled**
4. **Separate power return for every voltage in each crate**
5. **LV, HV supplies floating (with safety connections)**
6. **Mechanical support insulating**
7. **LAr cryogenics and cooling lines floating**
8. **Solenoid lines insulated, power supplies floating**
9. **Slow controls – Optical or transformer coupled**
10. **Sensors – isolated**

11. **General checking for “inadvertent” connections to various grounds**

Prevention of EMI and isolation (1)

- **To avoid coherent signals in group of read-out channels**
  - **Noise from digital circuits generated locally on a single read-out board in the crate**

    Cured by careful design of layout, filtering on the board, shielding of preamplifiers, minimization of digital operation on the board

  - **EM radiation surrounding the electronics and noise induced by penetration into cryostat/crates**
    - *Cured by well designed Faraday cage comprised of the cryostat, the feedthrough and the crates.*
    - *No electrical penetration in the cryostat except for signal and high voltage feedthrough*
    - *All services (pressure and temperature) filtered in the crates and fed into the cryostat on shielded cables*

ATLAS LAr Calorimeter
– Readout Electronics – Faraday Cage

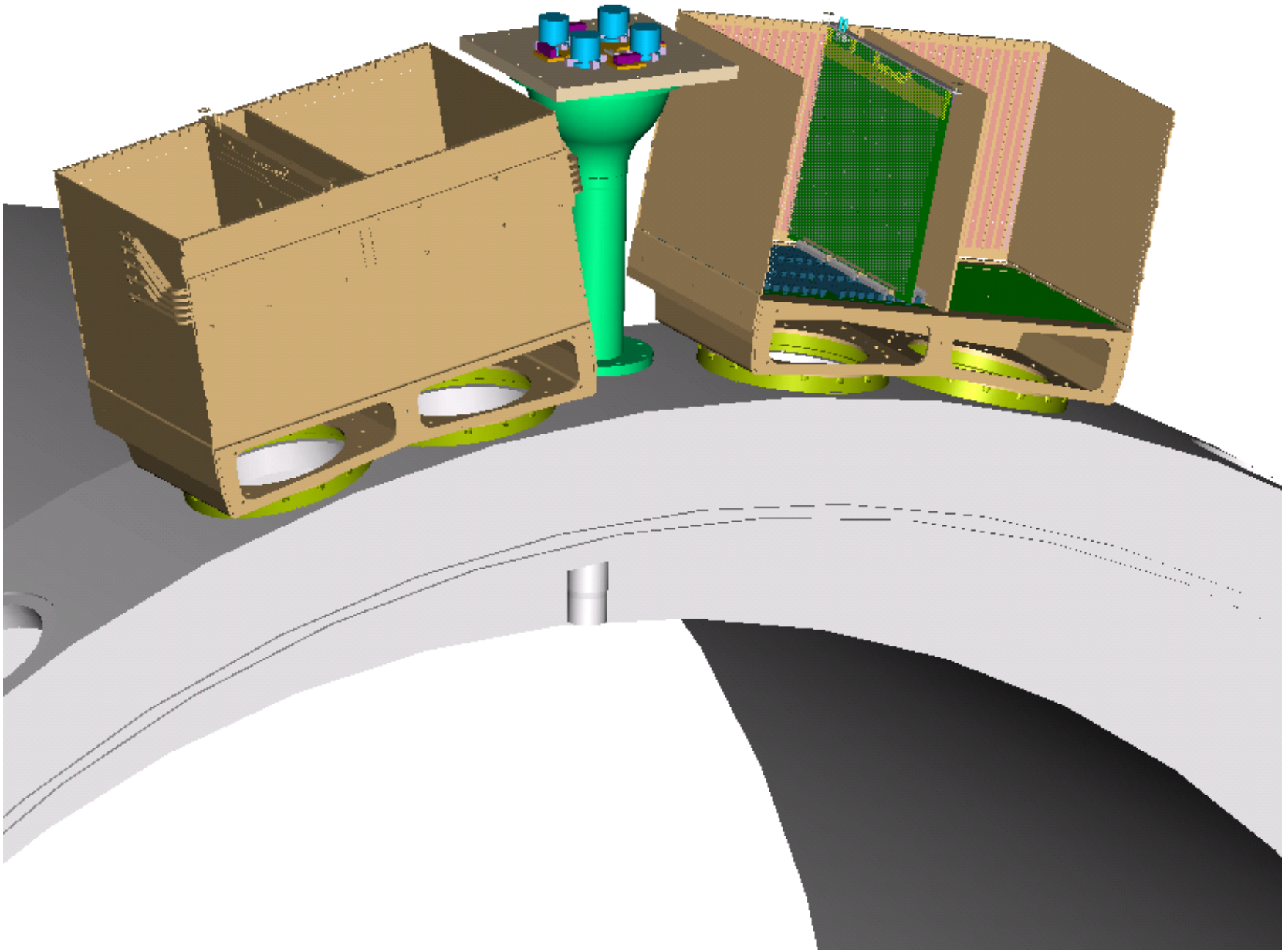

LAr Cal. Vital lines (i.e., Potential ground loops)

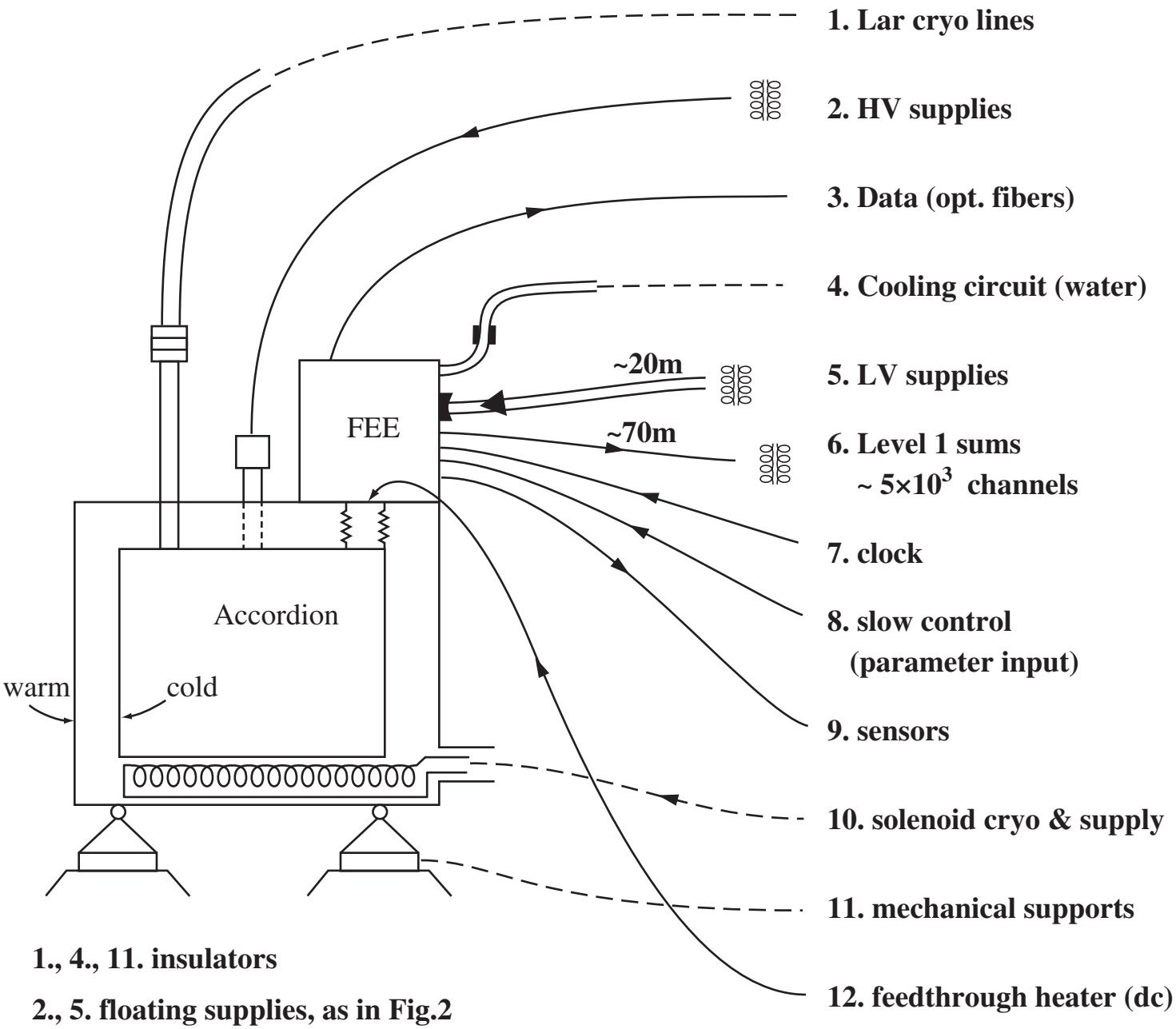

1., 4., 11. insulators

2., 5. floating supplies, as in Fig.2

6. differential transmission transformers (balun or signal)

7., 8. opto-couplers (or transformers)

9. insulate sensors; different techniques at various receivers

10. solenoid line to be insulated, power supply floating

12. heater insulated, capacitors to pedestal, floating supply

Fig. 1

Rules for Entering the Cryostat

1. Coaxial Cables

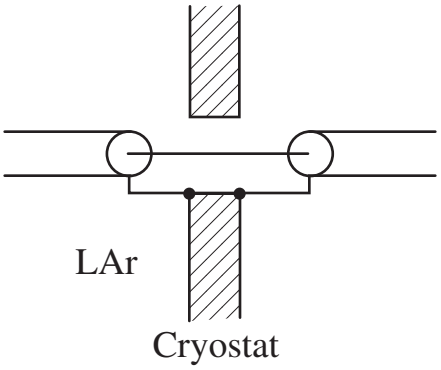

- Shield connected to cryostat before penetrating Faraday cage
- Short connection, low inductance
- Performed on standard feedthroughs

2. Power Supplies

- Capacitors with short leads, close to cryostat low inductance connection
- No net DC Current in Balun to avoid saturating Ferrite (pass power and return). In magnetic field up to ~ 300–400 gauss, use 3D3 type ferrite

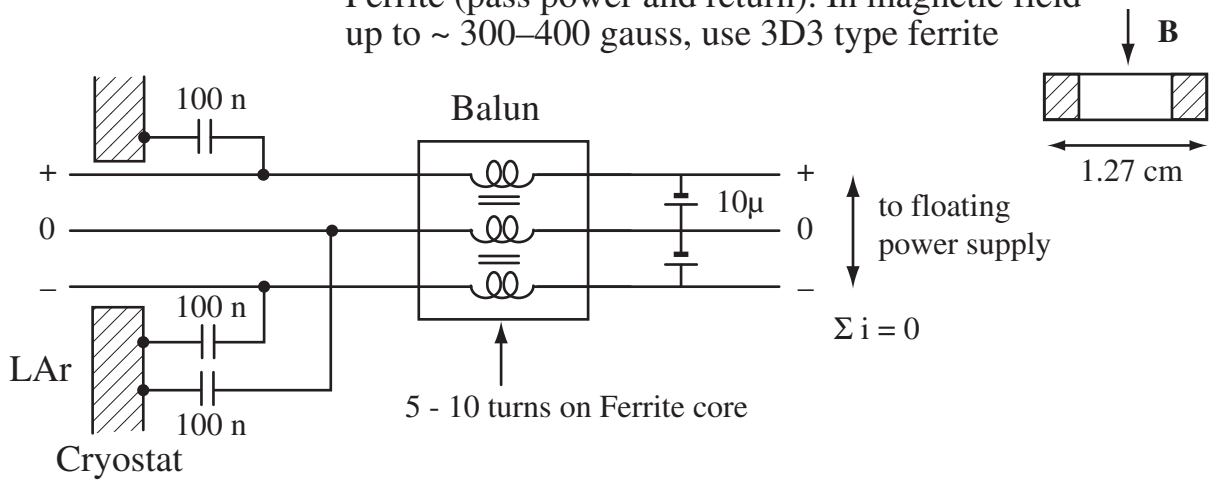

3. Probes, HV

- Capacitors with short leads, close to cryostat, low inductance connection
- R > 1 kΩ can be replaced by L > 1mH when no current flows

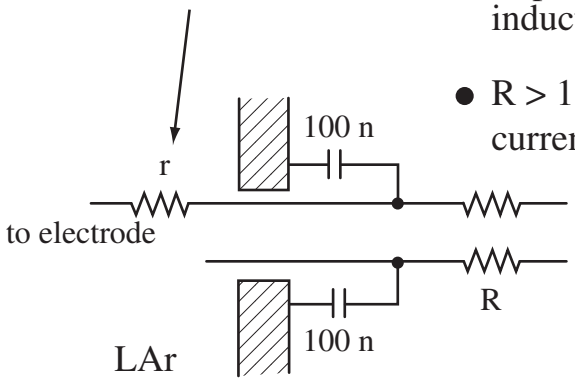

Fig. 3

Safety grounds

- **Well defined safety ground**
  - *The ground should be at USA15*
    - *To preserve from EMI the Level 1 trigger sum signals*
    - *The grounding scheme should extend the faraday cage of the calorimeter to include the twisted pair cables coming from the trigger sum board.*
    - *The common braid of Level 1 cables from each crate needs to be connected to the safety ground (through a ~ 2 cm braided Cu cable)*

- **Supplementary safety grounds**
  - *If the analysis of the whole subsystem identifies a "component" which if accidentally disconnected could present hazard, then the "component" must have a supplementary ground connection*
  - *Such a connection should be through a nonlinear element.*

Prevention of EMI and isolation (2)

- **Currents coming through ground loops**
  - *It is the most demanding issue since it involves potential connections to equipments at various distance from the cryostat*
  - *Basic design approach: isolate each cryostat with its read-out from everything else*
    - *Only one location where a connection to "ground" will be allowed for DC and low frequencies*
    - *Cryostats must be insulated at their supports and in all cryogenics lines and services*
    - *Each read-out crate has to be connected to his own floating power supply*
    - *The two halves of the accordion stack will be insulated from each other and from their supports and connected to the cryostat at their feedthroughs via signal cables*
    - *EM end-caps will be treated in the same way*

“Safety Ground”

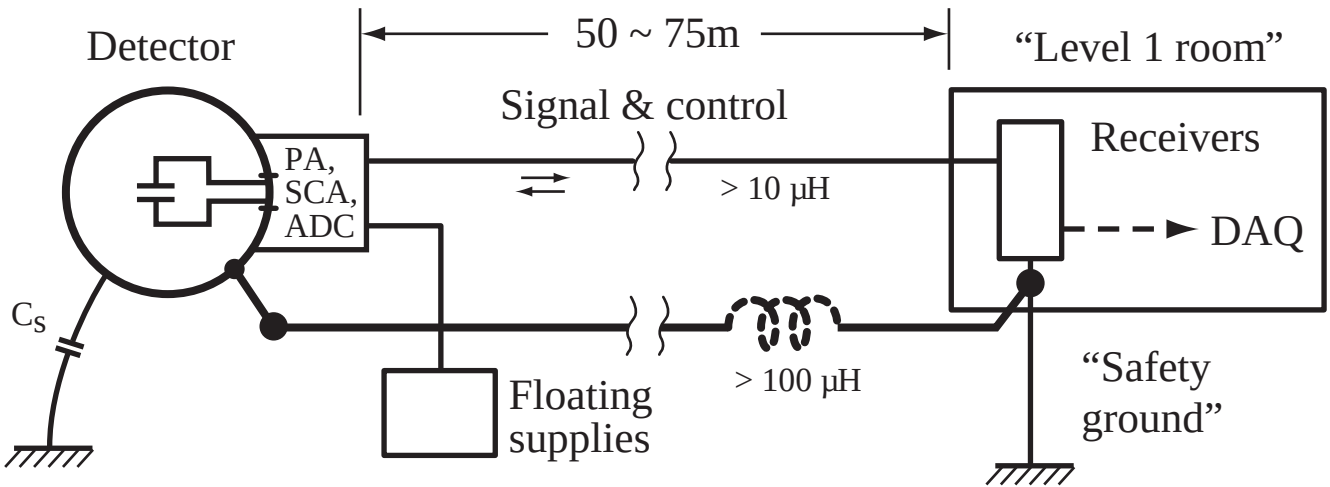

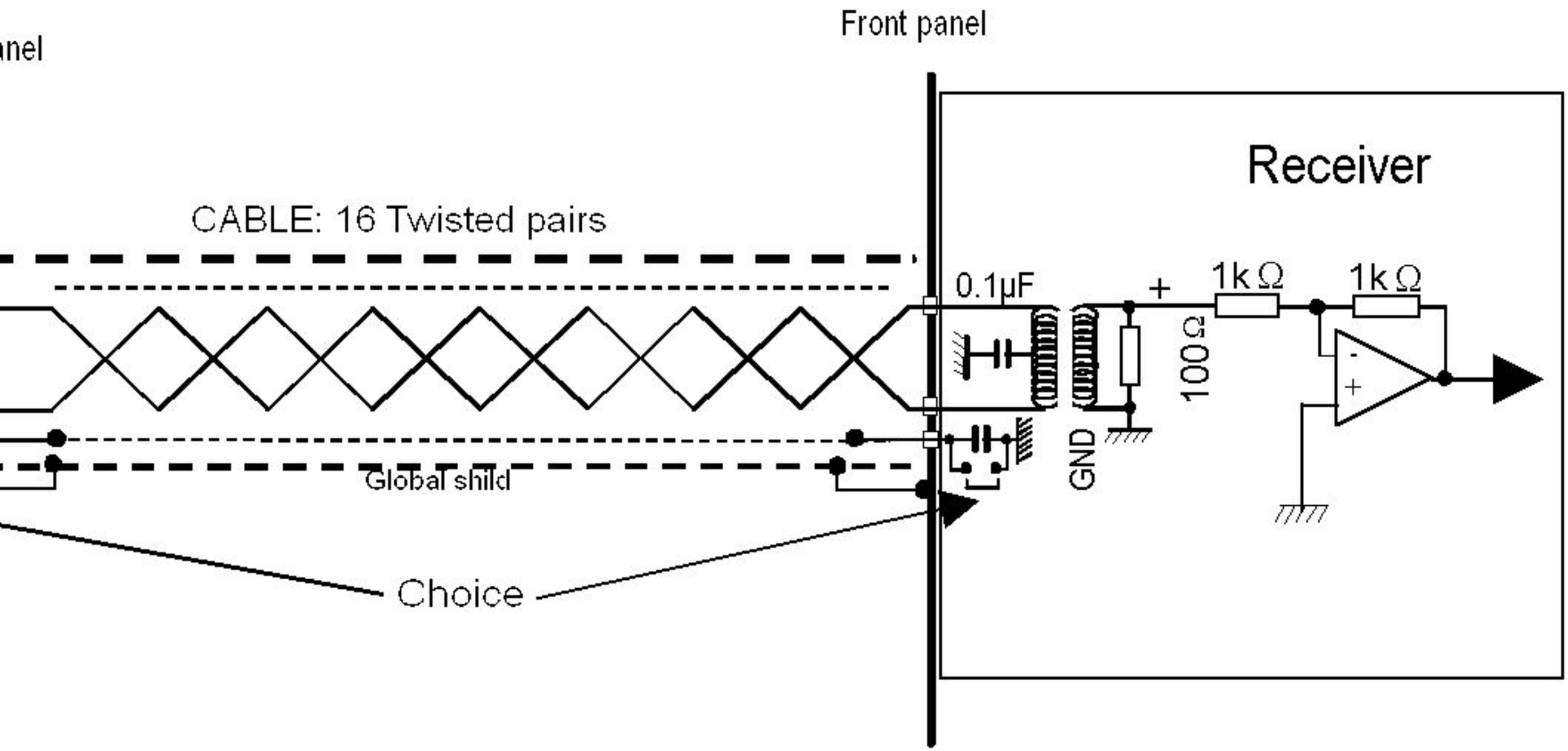
Front panel
Receiver
CABLE: 16 Twisted pairs
0.1µF
+
1kΩ
1kΩ
100Ω
GND
Global shild
Choice

Floating Supplies

1. LV Supplies <50V

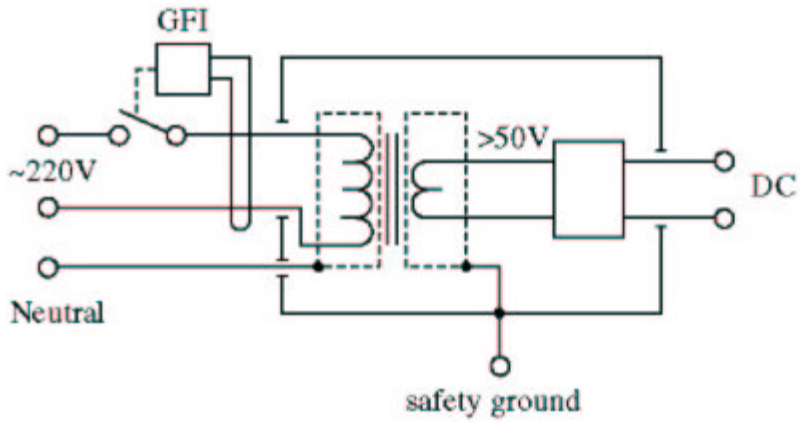

<50V secondary is allowed to float

2. HV Supplies > 50V → ~kV Supplies, low current

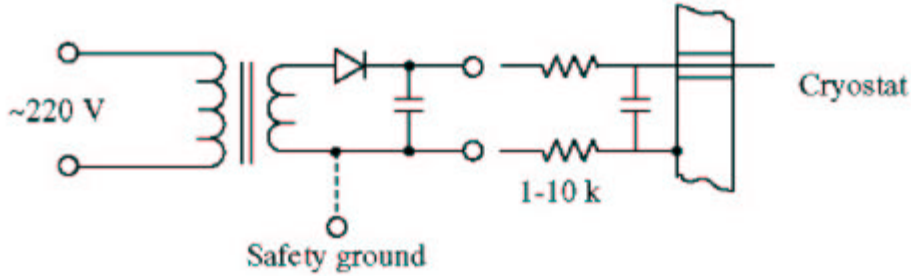

Low Voltage Switching Supplies and Rectifier

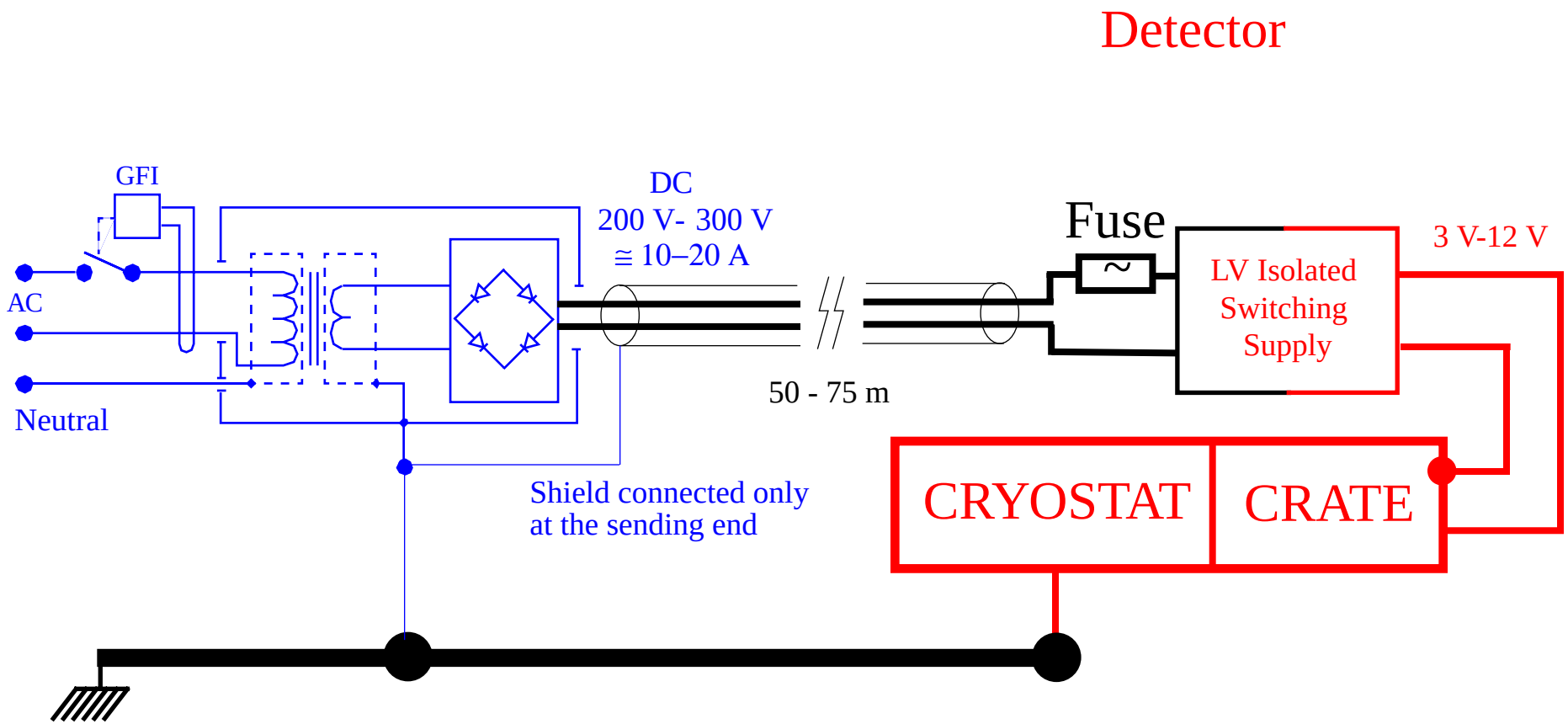

SAFETY GROUND
in “Level 1” Room

3. Supplementary safety grounding: high impedance at low voltage

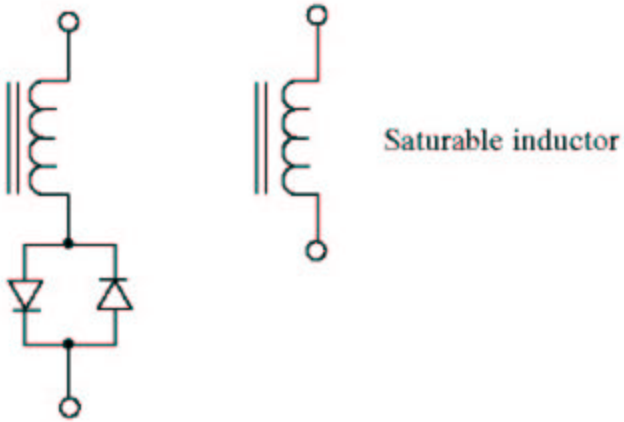

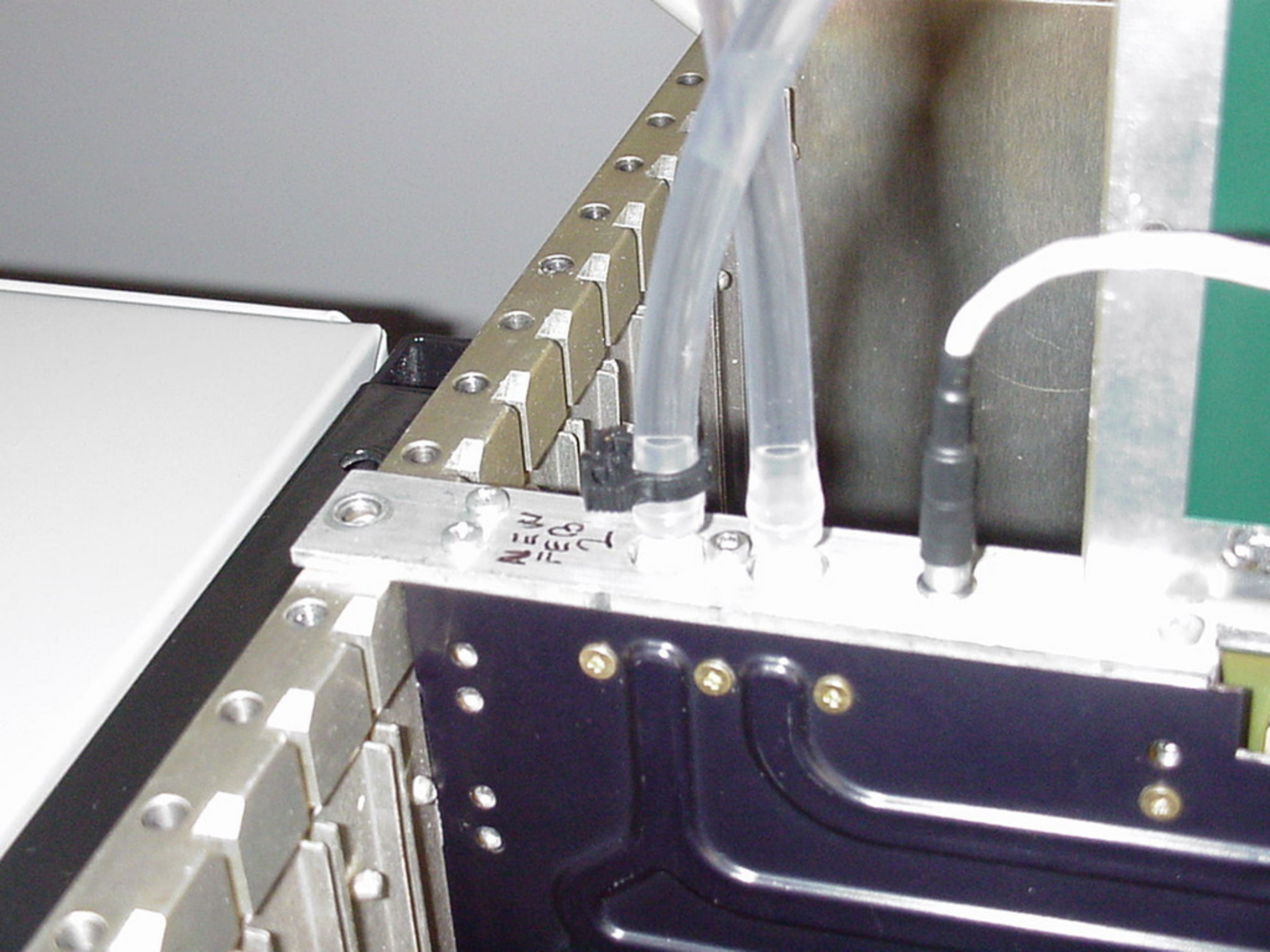

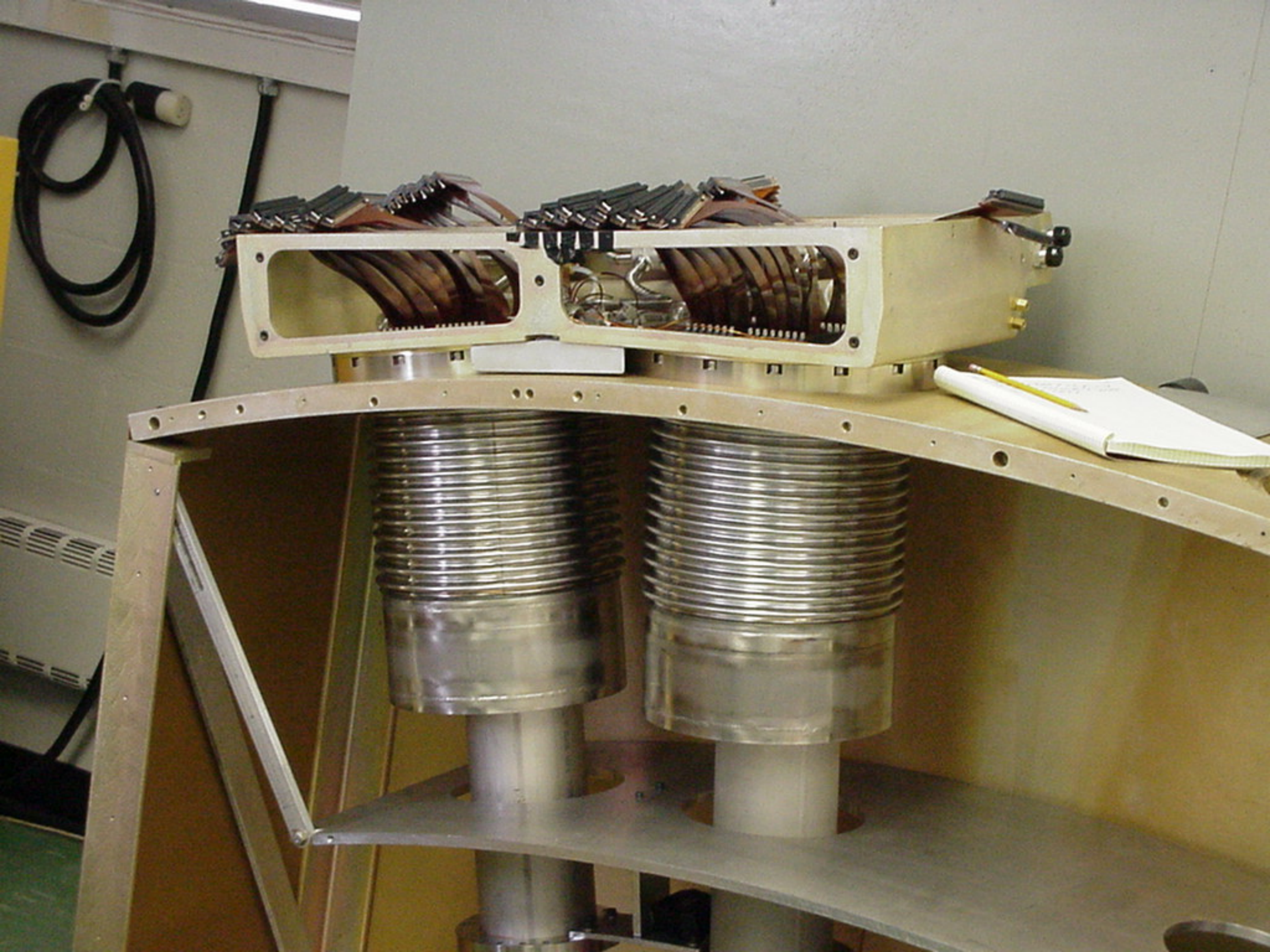

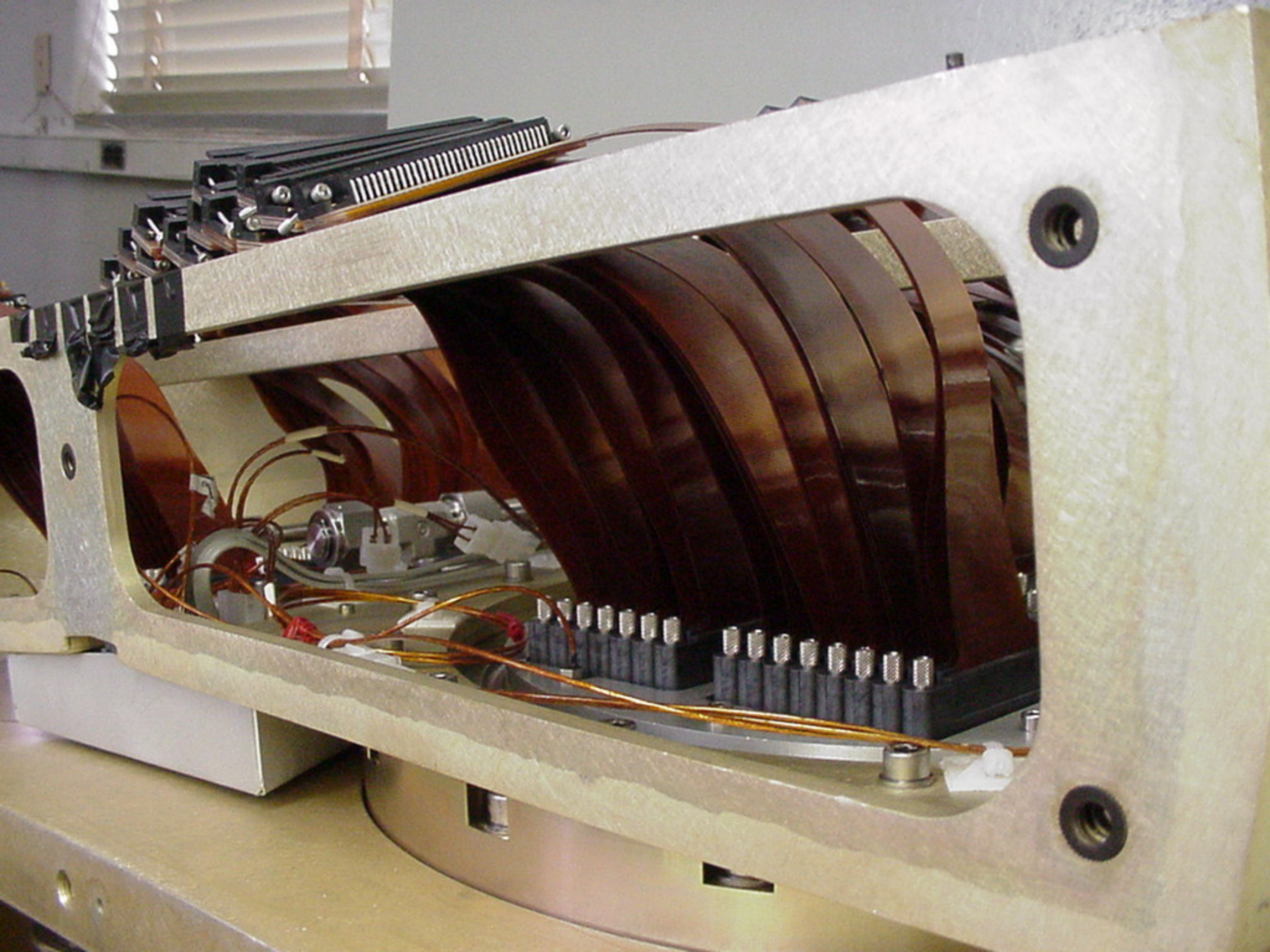

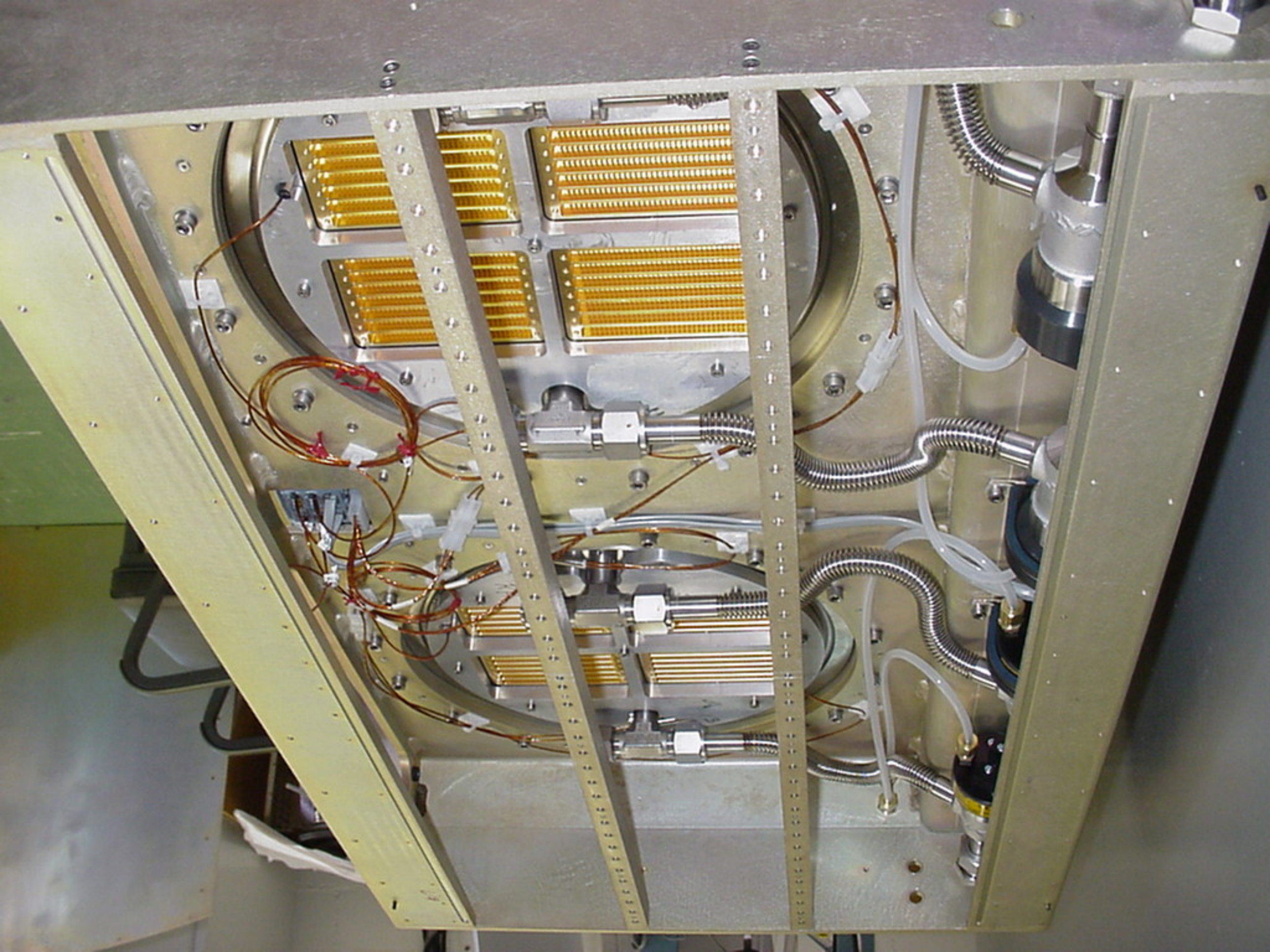

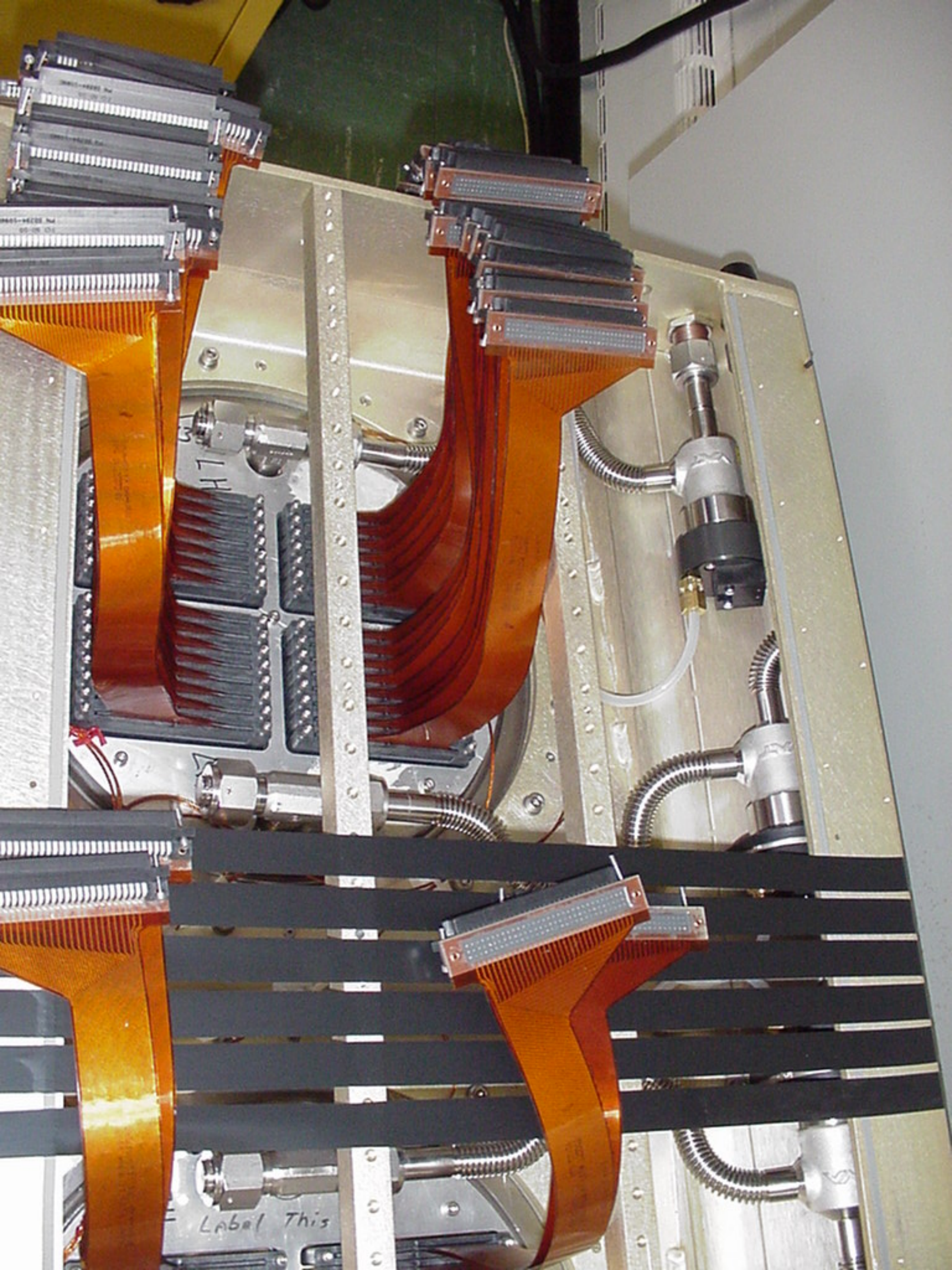
Label This

3.1 **Cryostat/solenoid insulation**

The general requirement is that the cryostat (both warm and cold walls) are to be isolated electrically from the solenoid and its service. Some specific steps agreed upon in discussions with the cryostat team and the solenoid team are listed here:

3.1.1. The solenoid coil, superconducting bus lines and its associated services, i.e., the support cylinder, radiation shield panels, and cooling tubes, are to be electrically isolated from the LAr cryostat cold vessel and the warm vacuum vessel.

3.1.2. The solenoid coil will be electrically floated in the LAr cryostat, but will be grounded with a resistance of 1-10 k-ohm at the coil power supply (8,000 A). This is important in order to monitor the coil against any other conductive paths (shorts) to ground. This is also consistent with the ATLAS guidelines for all superconducting magnets. The solenoid power supply must minimize the voltage excursions with respect to ground.

3.1.3. The associated solenoid services are electrically insulated from the LAr cryostat, but they are electrically connected to the support structure for the ATLAS detector together with the solenoid chimney, the control dewar and common cryogenics (to be provided by CERN).

3.1.4 The (thermal) super insulation between the LAr cryostat and the solenoid must include electrical insulation. This can be achieved by adding a few layers of Kapton/mylar. Special care must be taken that there are no penetrations that allow electrical contact and violate electrical insulation. This has to be realized, while allowing sufficient passages to evacuate the solenoid vacuum space.

3.1.5. The solenoid chimney and control dewar will have to share a common vacuum with the LAr cryostat, but they must be isolated from the LAr cryostat. Consequently, an insulation flange (such as a G10 disk) is required at the nearest location (order of 20-30 cm) from the bottom of the chimney (the chimney is directly connected to the warm wall of the LAr cryostat).

3.1.6. The solenoid services in the chimney area are electrically a part of the solenoid, as is ALL of the solenoid monitoring equipment, and thus are insulated from the cryostat.

3.1.7. Special care must be taken to minimize fluctuations in the voltage across the solenoid. At present, the expected fluctuations are: +/- 12 V in normal operation and 0 to - < 500 V in case of emergency (such as power supply switching off due to power failure or the magnet quench).

3.2 **Insulation between the central tracker and the cryostat**

The general requirement is that the cryostat be isolated electrically from the central tracker and its associated services. Items of concern for isolation between these two subsystems are as follows:

3.2.1. Tracker support rails. The tracker support rails are welded to the cryostat, and thus electrically are part of the cryostat. Consequently, the central tracker has to be insulated from the rails.

3.2.2. Tracker services supported on the cryostat inner warm wall. The tracker plans to support part of its services on the cryostat inner wall. These include cooling lines, signal and power cables. All of these have to be insulated from the cryostat inner wall.

3.2.3. Tracker services on the cryostat head-vessel. Some of the tracker services will be supported on the cryostat head-vessel. All of these services will have to be insulated from the cryostat head vessel.

3.2.4. Tracker services in the gap region. All the tracker services in the gap, including cooling pipes, cooling manifolds, and patch panels for the electrical connections, need to be supported by the cryostat and tile calorimeter. ALL are to be electrically insulated from the cryostat, as well as from the readout electronics crates that are electrically part of the cryostat.

3.2.5. Beam support. The beam is suspended from the cryostat head-vessel and the support has to be electrically insulated from the head-vessel so that there is no electrical contact between the beam pipe and the cryostat.

3.3 **Insulation between the tile calorimeter and the cryostat**

The general requirement is that the cryostat has to be isolated electrically from the tile calorimeter. Insulation of support interfaces and LAr services in the space between the tile calorimeter and the cryostat concerns the following items.

3.3.1. Cryostat support legs. The cryostat support legs, that are attached to the tile by bolts, are connected to the tile calorimeter. The support stubs are connected to the cryostat. In between, there will be a thin G10 insulation that will insulate the legs electrically.

3.3.2. Cryostat wall and the tile inner surface. There is nominally 2 cm of stay-clear area between the cryostat and the tile calorimeter. So, in principle, they should not touch. It is, however, very difficult to guarantee that no loose conducting material will be dropped into that region during assembly. It is recommended that a thin layer of G10, or some other insulating material, be placed in that region to insure electrical isolation. (As some means of protection from accidental LAr spill has been suggested, the same "sheet" could also insure that no liquid drops on the tile.) The responsibility for implementation of this insulating sheet should be defined.

3.3.3. Cooling manifolds for the readout electronics. The cooling manifolds are not in electrical contact with the readout. The insulation will be made in the tubes that connect the manifold to the cooling plates attached to the front end electronics boards in the readout crates.

3.3.4. Power supplies for readout crates. The dc-dc converter solution, being investigated to locate the power supplies at the readout crates, will require that the dc-dc converter be supported in the gap and/or in the tile finger region. The dc-dc converter will have to be insulated from the tile.

3.3.5. LAr cables in the gap region. All cables that are part of the LAr subsystem will be isolated from the tile. It is also the responsibility of the LAr subsystem to insulate any cable shields from any cable trays attached to the tile calorimeter.

3.3.6. Tracker services supported on the tile calorimeter. All tracker services that have to pass through the gap will be insulated from the LAr calorimeter. These include all of the cooling pipes, cables, trays, etc. These services have to pass through the tile fingers and the isolation at
that point should be defined by the tracker and the tile calorimeter subsystem.

3.4 **Cryogenics and vacuum lines isolation**

The general requirement is that the cryostat has to be isolated electrically from the cryogenics and vacuum lines. The cryostat is considered as an entity, since the cold vessel is connected to the warm vessel by the very low resistance of signal returns of all vacuum cables (inside the feedthroughs) in parallel.

3.4.1. LN_2 cooling lines: input and output. There are three nitrogen input and output lines per side in the barrel and two per end cap. They will be insulated by using G10 in the bayonets on the cold and warm lines. The bayonets are installed near the cryostat, about 40 cm from the outer radius of the cryostat. The design for the insulation will be done by the cryogenics team.

3.4.2. LAr fill line, LAr vacuum exhaust line and LAr dump line. The vacuum space in the LAr fill line is also used as an exhaust in case of a liquid spill to the warm vessel. Thus it has a 6 inch diameter pipe coming out on the side. The lines and the exhaust line have to be insulated.

Status of the "policy" (1)

- **The key elements where possible are part of the design:**
  1. **Most of the elements have been properly designed**
  2. **Some concerns remains in the integration of LAr DCS with the overall DCS**
     - ✓ *An overall review at ATLAS level is advisable*
  3. **Interfaces with other subsystems should be reviewed**
     - ✓ *The cooling system is under design* ***with isolation***
     - ✓ *The distribution of ATLAS services is not final*
     - ✓ *Not all subsystems have a final design in place which can be reviewed against ATLAS grounding policy*

- **The LAr grounding policy is not formalized:**
  - **Some documents exist but they are NOT easily accessible**
    - **An overall EDMS document needs to be written**
  - **A check list is needed to verify that the grounding policy is applied**
    - **During integration and installation**
    - **During commissioning**

Example of Grounding Configuration Document

Power						
From/To	*Service type*	**Total/crate**	*Total*	*Actual Sizes (mm)*	*Responsible*	*Grounding*
Local	*Power bus*	*1*	*NA*		*H. Takai*	*Grounded to Crate through FEB connections*
Local	*Power cables in the Gap*	*10 (5/crate side)*	*NA*	*15 O.D. each*	*H. Takai*	*Grounded to Crate*
Local (In the finger region)	*Power Supply*	*NA*	*1*	*16/face* *32 total*	*300x300x 150 each*	*Floating Supply, grounded to crate through low voltage cables*
Power supply to USA15	*300 V Input cable (shielded twisted pair cable)*	*1/crate*	*16/face* *32 total*	*5 O.D. each*	*H. Takai*	*Shielded cable, connected to ground only at the 300V end.*
Power supply to 300 Volt power Supply	*Interlock for the power supply*	*1* **(4 wires)**	*16/face* *32 total*	*5 O.D. each*	*H. Takai*	*To be determined*
Power supply to ELMB	*Power supply monitoring cable*	*1 (Up to 24 wires, 10 + 10 +4 lines, Voltages, Current, Temperature)*	*16/face* *32 total*	*20 O.D. each*	*H. Takai*	*To be determined*

Status of the "policy" (2)

- **The "day-by-day" verification of the application of the grounding rules needs to be organized:**

  - ✓ *The integration phase of the calorimeters is already started.*
  - ✓ *Feedthrough, pedestals, cryogenics lines, vacuum lines etc. are being installed*
  - ✓ *A supervisor of these activities needs to be nominated*